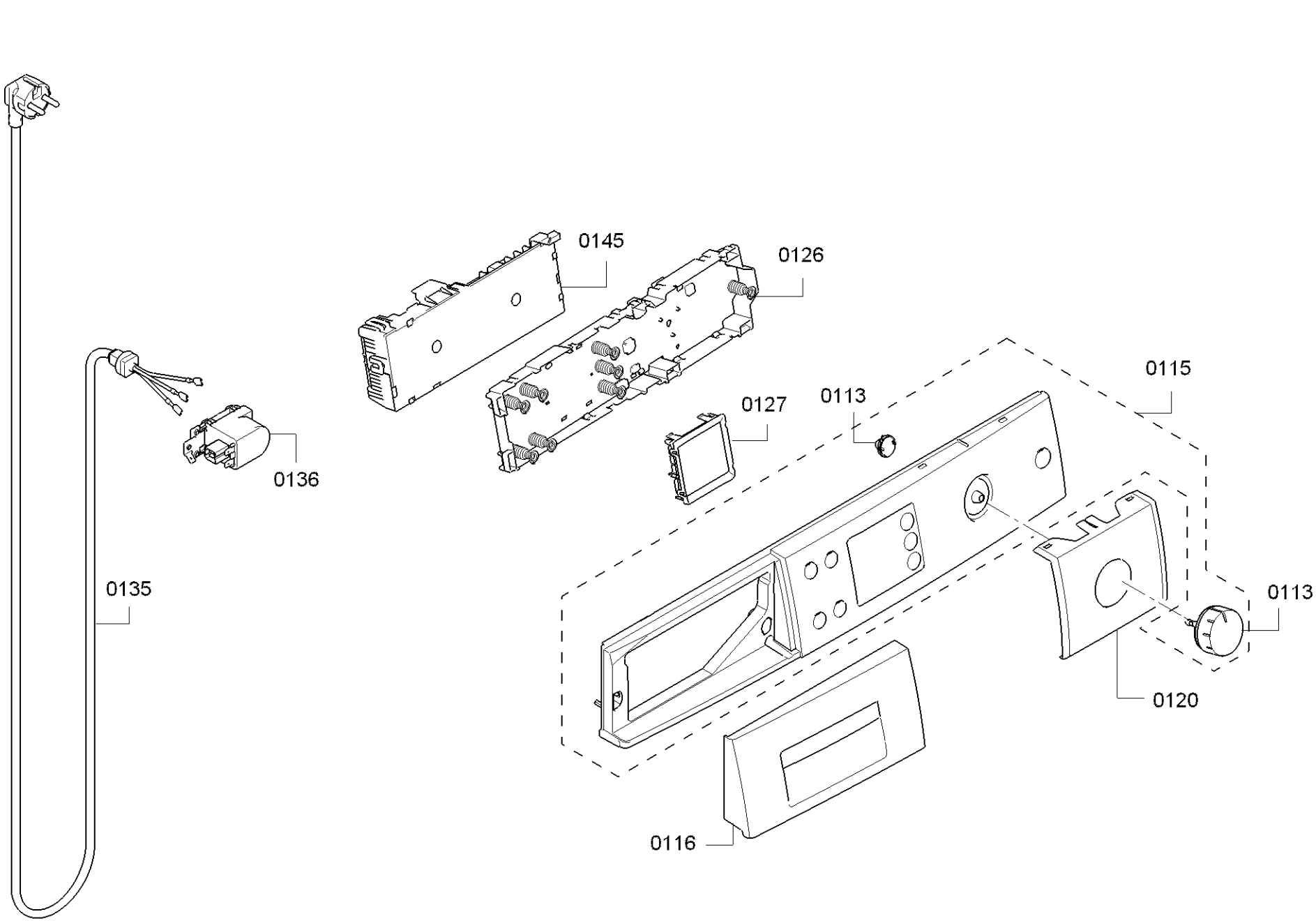


58300000152451 aet 000 c 1/5

Copyright © by Bosch

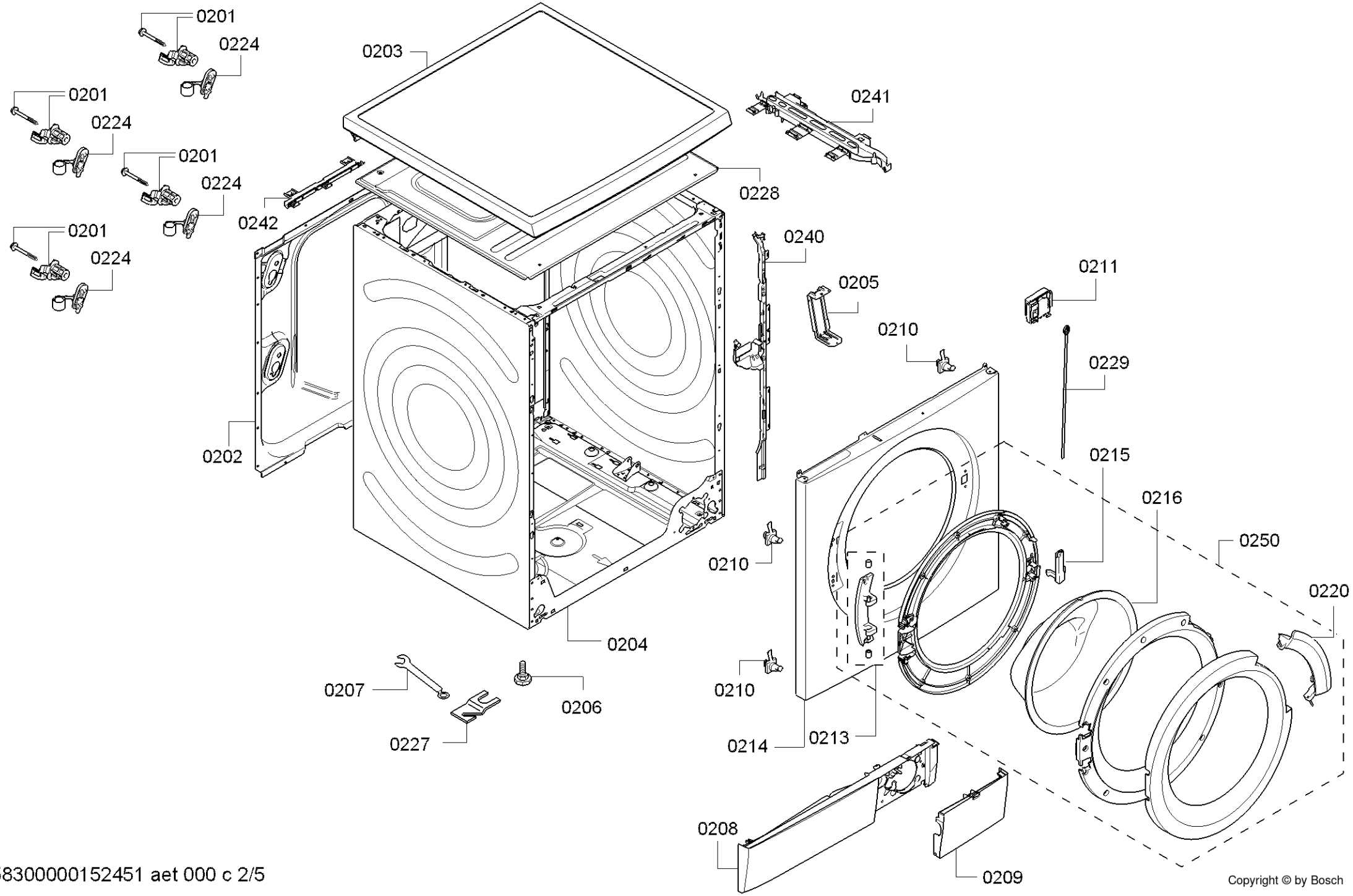


58300000152451 aet 000 c 2/5

Copyright © by Bosch

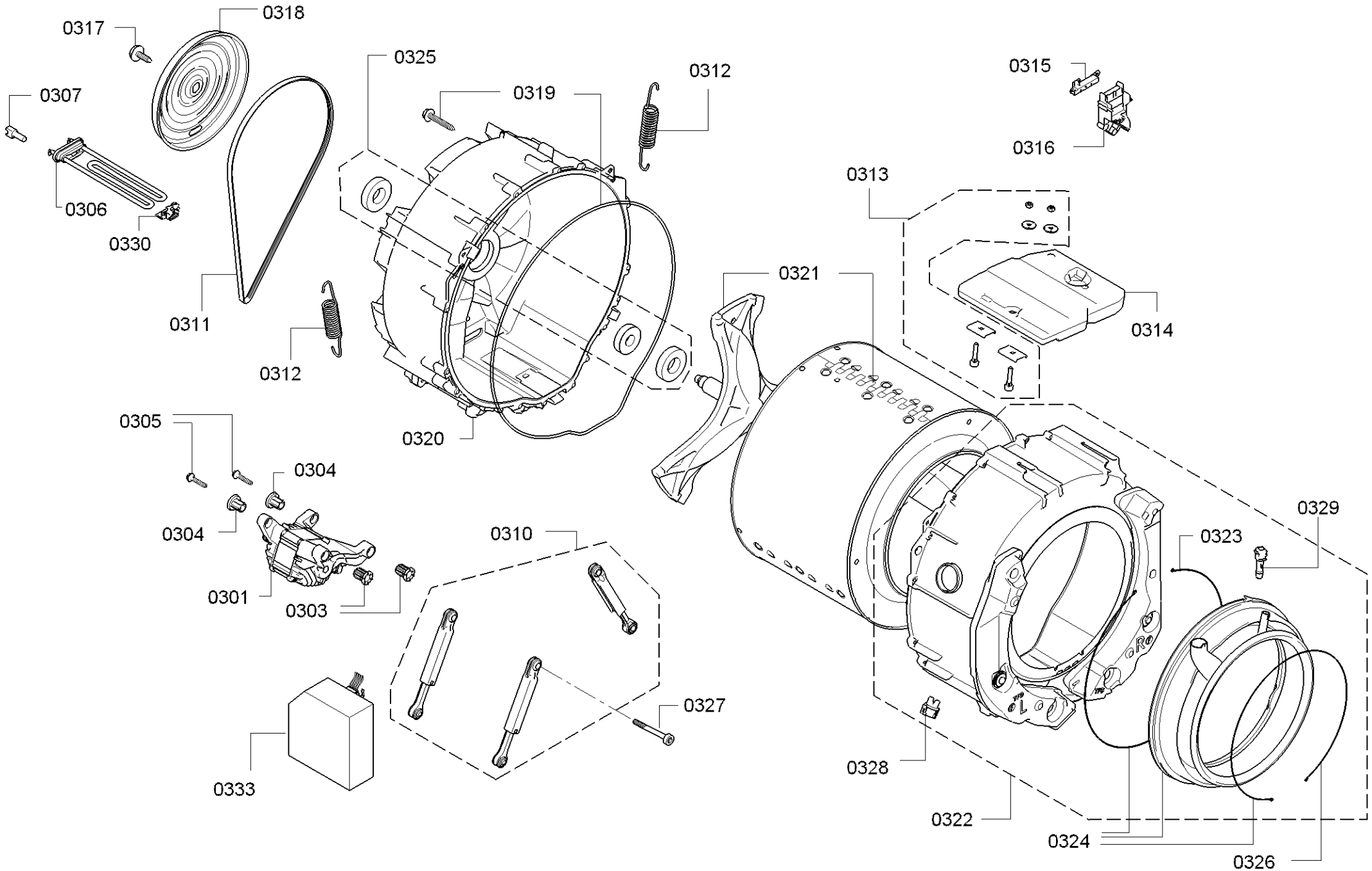


58300000152451 aet 000 c 3/5

Copyright © by Bosch

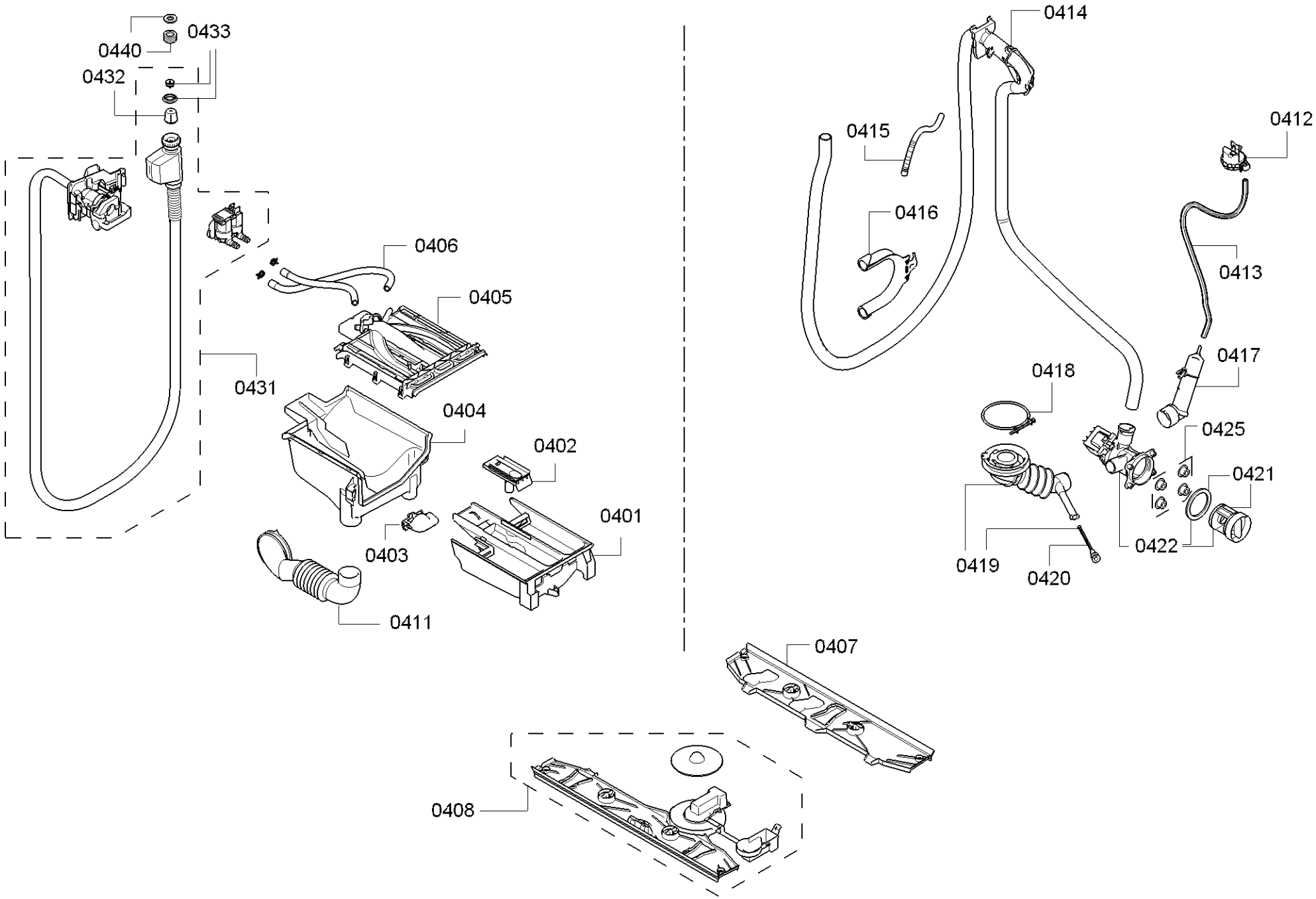


58300000152451 aet 000 c 4/5

Copyright © by Bosch

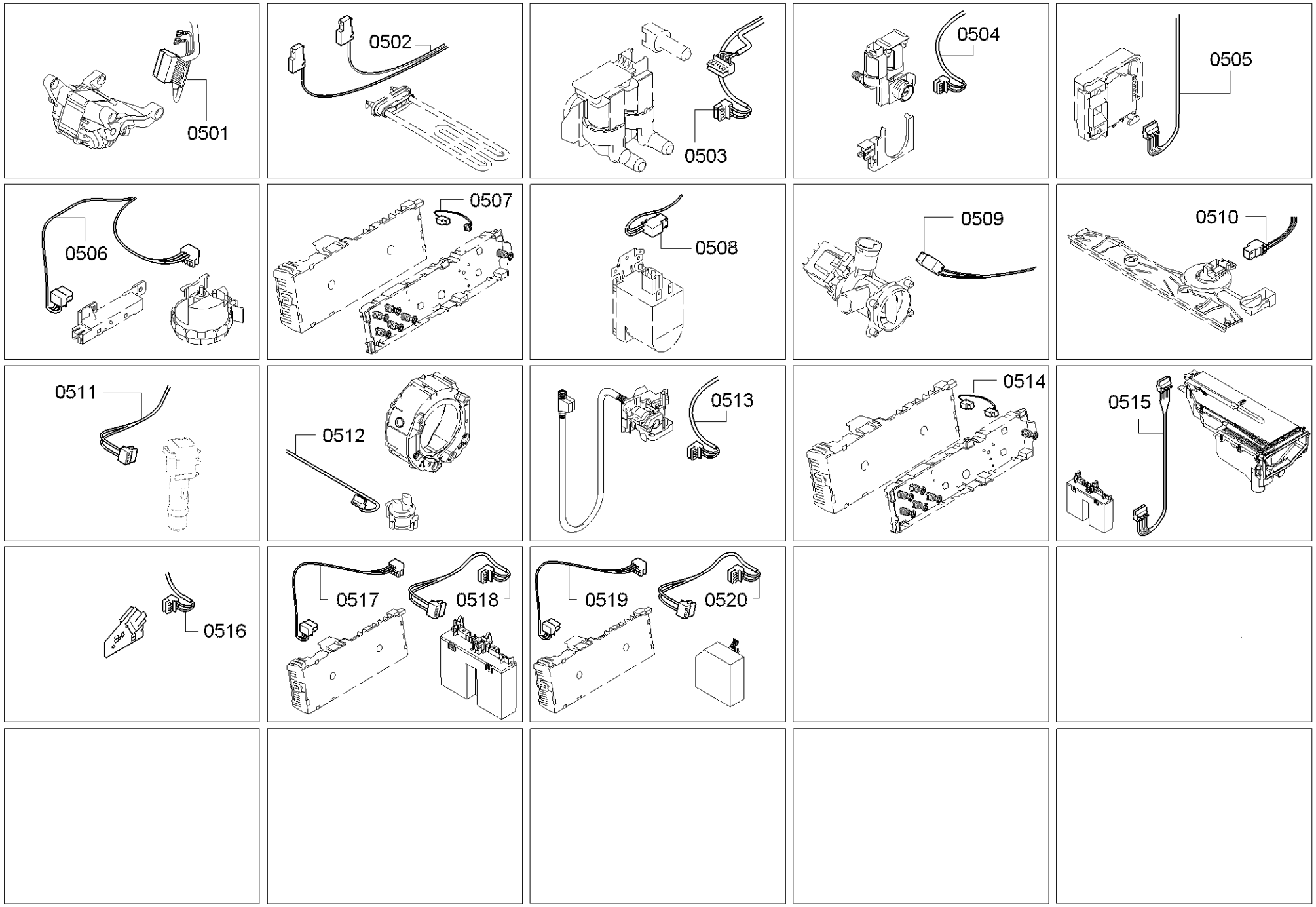




Copyright © by Bosch